ELSAN Elektrik San. ve Tic. A.Ş.
Etiler Mah. 1458. Cad. No:40
06790 Etimesgut / Ankara / TÜRKİYE
T: +90 312 244 09 94 **F:** +90 312 243 14 38
M: info@emtas.com.tr **W:** www.emtas.com.tr

TECHNICAL SPECIFICATION SHEET

THREE PHASES SQUIRREL CAGE ASYNCHRONOUS MOTORS			
Type	NMSF 160Lb4		
Protection Class	IP55		
Duty Type / Service Factor	S2 - 240 dk	1.0	
Insulation Class	F		
Construction Type /Frame	B3/ 160Lb4		
Altitude / Ambient temperature	1000 m	40 C°	
Customer / Date / Order Number	-	12.03.2026	-

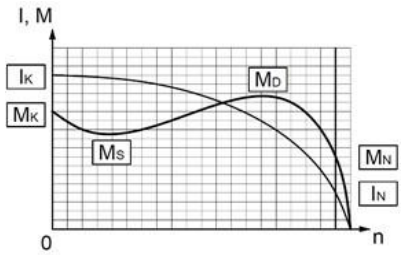

PERFORMANCE DATA
(FULL LOAD)

Rated Output (kW)	Rated Speed (1/min)	Voltage (V)	Frequency (Hz)	Current (A)	Efficiency (%)	Power Factor (Cos ϕ)	Rated Torque MN (Nm)	Starting Current IK/IN	Starting Torque MK/MN	Breakdown Torque MD/MN	Moment of Inertia Jmot (kgm²)
15	1465	400	50	28,4	90,6	0,84	97,8	6,9	2,7	2,9	0,073

CHARACTERISTIC DATA

Frame	Cast Iron (GG20)	**Bearings**					**Drive End Bearing**	**Non Drive End Bearing**
End Shield - DE and NDE	Cast Iron (GG20)		**Standart**				6309 ZZ	6309 ZZ
Foot	Ductile Iron (GGG40)		**Heavy Duty**				NU 309	-
Fan	Plastic	**Special Equipment**	**Brake**	**Forced ventilation**	**Heater**		**Encoder**	**Heat sensor**
Terminal box	Aluminium		200 Nm brake	---	☐		---	---
Cable Gland	PA6.6 2 x Pg21	**Colour**	RAL 6028 - Green		**Weight (kg)**		160	

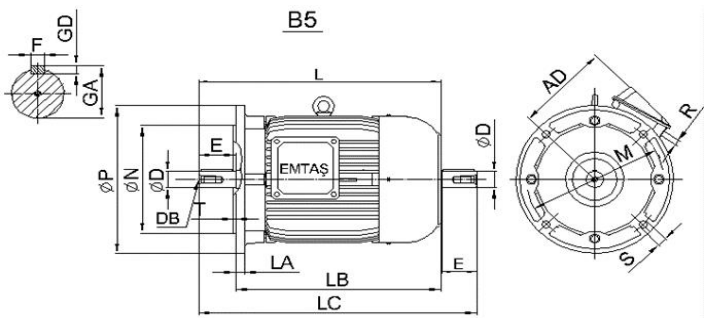

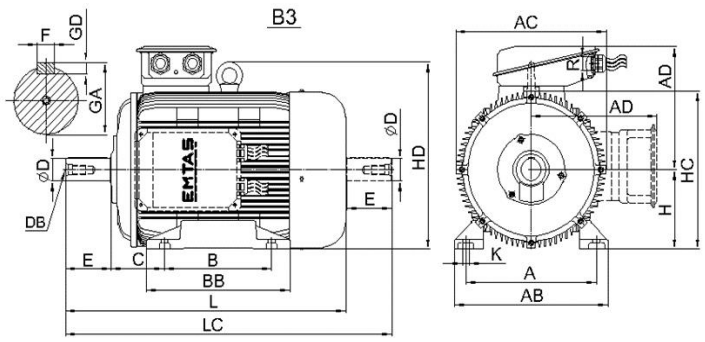

DIMENSIONS (mm)
(B3-B5-V1-V5-V6-B6-B7-B8-B35)

B3											B5								Common Dimensions								
H	A	B	C	AB	AC	AD	BB	HC	HD	K	P	N	M	S	Hole Pcs.	T	LA	LB	LC	L	ØD	E	F	GA	GD	DB	R
160,0	254,0	254,0	108,0	318,0	310,0	236,0	304,0	315,0	373,0	15,0	350,0	250,0	300,0	19,0	4,0	5,0	18,0	---	879,0	763,0	42,0	110,0	12,0	45,0	8,0	*	2 x Pg21

Important Note : Values provided in this datasheet represent the preliminary design values. Please keep in mind that these values might vary for the final product, due to technical requirements.