ELSAN Elektrik San. ve Tic. A.Ş.
Etiler Mah. 1458. Cad. No:40
06790 Etimesgut / Ankara / TÜRKİYE
T: +90 312 244 09 94 **F:** +90 312 243 14 38
M: info@emtas.com.tr **W:** www.emtas.com.tr

TECHNICAL SPECIFICATION SHEET

THREE PHASES SQUIRREL CAGE ASYNCHRONOUS MOTORS			
Type	NMSF 280M4		
Protection Class	IP55		
Duty Type / Service Factor	S1	1.0	
Insulation Class	H		
Construction Type /Frame	B3/ 280M4		
Altitude / Ambient temperature	1000 m	40 C°	
Customer / Date / Order Number	-	12.03.2026	-

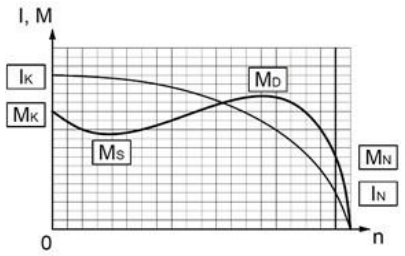

PERFORMANCE DATA
(FULL LOAD)

Rated Output (kW)	Rated Speed (1/min)	Voltage (V)	Frequency (Hz)	Current (A)	Efficiency (%)	Power Factor (Cos ϕ)	Rated Torque MN (Nm)	Starting Current IK/IN	Starting Torque MK/MN	Breakdown Torque MD/MN	Moment of Inertia Jmot (kgm²)
90	1490	400	50	155,4	96,1	0,87	576,8	7,0	2,2	2,6	1,590

CHARACTERISTIC DATA

Frame	Cast Iron (GG20)	**Bearings**					**Drive End Bearing**	**Non Drive End Bearing**
End Shield - DE and NDE	Cast Iron (GG20)		**Standart**				6317	6316
Foot	Ductile Iron (GGG40)		**Heavy Duty**				NU 317	-
Fan	Aluminium	**Special Equipment**	**Brake**	**Forced ventilation**	**Heater**		**Encoder**	**Heat sensor**
Terminal box	Cast Iron (GG20)		1600 Nm brake	---	☐		---	PTC
Cable Gland	PA6.6 2 x Pg36	**Colour**	RAL 6028 - Green		**Weight (kg)**		910	

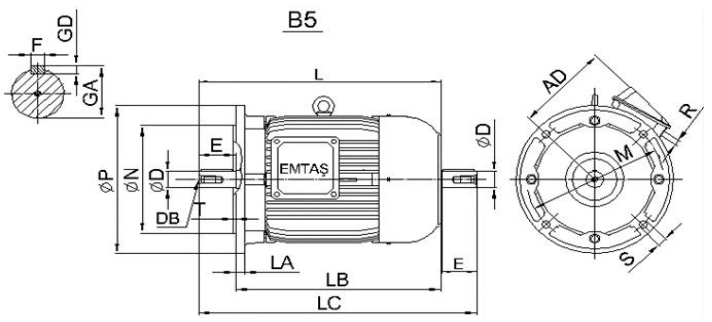

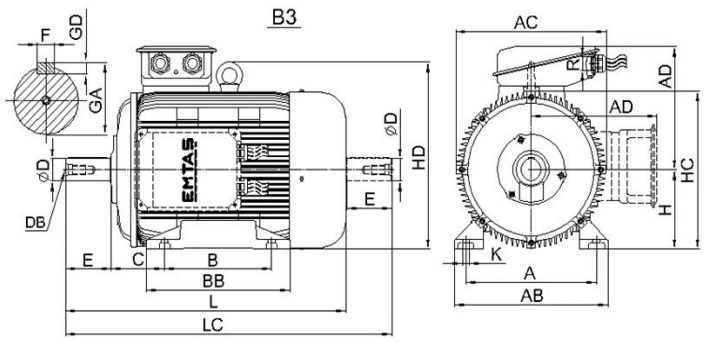

DIMENSIONS (mm)
(B3-B5-V1-V5-V6-B6-B7-B8-B35)

B3											B5								Common Dimensions								
H	A	B	C	AB	AC	AD	BB	HC	HD	K	P	N	M	S	Hole Pcs.	T	LA	LB	LC	L	ØD	E	F	GA	GD	DB	R
280,0	457,0	368/419	190,0	541,0	541,0	413,0	499,0	560,0	626,0	24,0	550,0	450,0	500,0	19,0	8,0	5,0	18,0	---	1360,5	1215,5	75,0	140,0	20,0	79,5	12,0	M20	2 x Pg36

Important Note : Values provided in this datasheet represent the preliminary design values. Please keep in mind that these values might vary for the final product, due to technical requirements.