**ELSAN Elektrik San. ve Tic. A.Ş.**
Etiler Mah. 1458. Cad. No:40
06790 Etimesgut / Ankara / TÜRKİYE
**T:** +90 312 244 09 94 **F:** +90 312 243 14 38
**M:** info@emtas.com.tr **W:** www.emtas.com.tr

# TECHNICAL SPECIFICATION SHEET

| THREE PHASES SQUIRREL CAGE ASYNCHRONOUS MOTORS | | | |
|---|---|---|---|
| **Type** | NMSF 315Ma4 | | |
| **Protection Class** | IP 65 | | |
| **Duty Type / Service Factor** | S1 | 1.0 | |
| **Insulation Class** | H | | |
| **Construction Type /Frame** | B3/ 315Ma4 | | |
| **Altitude / Ambient temperature** | 1000 m | 40 C° | |
| **Customer / Date / Order Number** | - | 12.03.2026 | - |

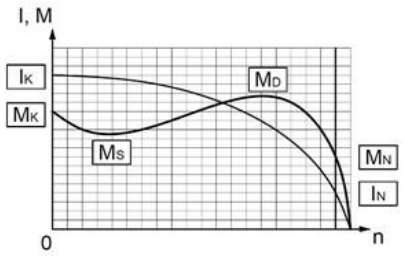


## PERFORMANCE DATA
## ( FULL LOAD )

| Rated Output (kW) | Rated Speed (1/min) | Voltage (V) | Frequency (Hz) | Current (A) | Efficiency (%) | Power Factor (Cos ϕ) | Rated Torque MN (Nm) | Starting Current IK/IN | Starting Torque MK/MN | Breakdown Torque MD/MN | Moment of Inertia Jmot (kgm²) |
|---|---|---|---|---|---|---|---|---|---|---|---|
| 132 | 1490 | 400 | 50 | 224,6 | 96,4 | 0,88 | 846,0 | 6,0 | 2,1 | 2,4 | 2,624 |

## CHARACTERISTIC DATA

| | | | | | | | | |
|---|---|---|---|---|---|---|---|---|
| **Frame** | Cast Iron (GG20) | **Bearings** | | | | | **Drive End Bearing** | **Non Drive End Bearing** |
| **End Shield - DE and NDE** | Cast Iron (GG20) | | **Standart** | | | | 6319 | 6318 |
| **Foot** | Ductile Iron (GGG40) | | **Heavy Duty** | | | | NU 319 | - |
| **Fan** | Aluminium | **Special Equipment** | **Brake** | **Forced ventilation** | **Heater** | | **Encoder** | **Heat sensor** |
| **Terminal box** | Cast Iron (GG20) | | 3200 Nm brake | --- | ☐ | | --- | PTC |
| **Cable Gland** | Brass 2 x Pg48 | **Colour** | RAL 6028 - Green | | **Weight (kg)** | | | 1161 |

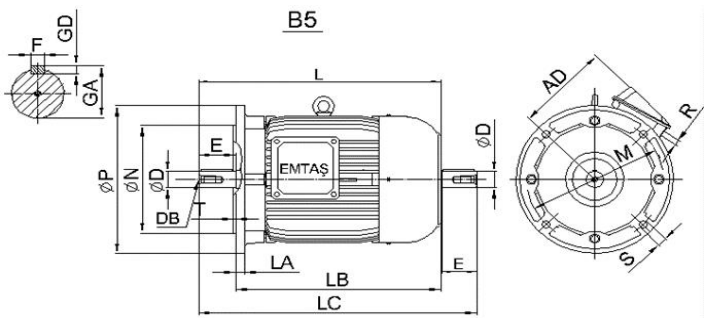


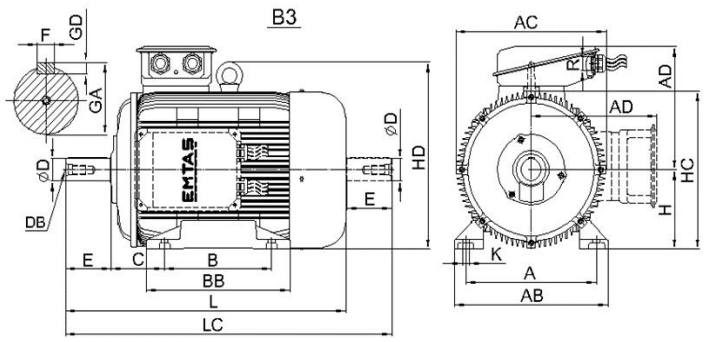


## DIMENSIONS (mm)
## ( B3-B5-V1-V5-V6-B6-B7-B8-B35 )

| B3 | | | | | | | | | | | B5 | | | | | | | | Common Dimensions | | | | | | | | |
|---|---|---|---|---|---|---|---|---|---|---|---|---|---|---|---|---|---|---|---|---|---|---|---|---|---|---|---|
| H | A | B | C | AB | AC | AD | BB | HC | HD | K | P | N | M | S | Hole Pcs. | T | LA | LB | LC | L | ØD | E | F | GA | GD | DB | R |
| 315,0 | 508,0 | 457,0 | 216,0 | 620,0 | 612,0 | 501,0 | 550,0 | 621,0 | 682,0 | 28,0 | 660,0 | 550,0 | 600,0 | 24,0 | 8,0 | 6,0 | 24,0 | --- | 1556,0 | 1378,0 | 85,0 | 170,0 | 22,0 | 90,0 | 14,0 | M20 | 2 x Pg48 |

Important Note : Values provided in this datasheet represent the preliminary design values. Please keep in mind that these values might vary for the final product, due to technical requirements.